200 MPH AIR CONDITIONING

SINCE Vintage Air 1976

1955-56 CHEVY

GEN IV

56155-PCZ

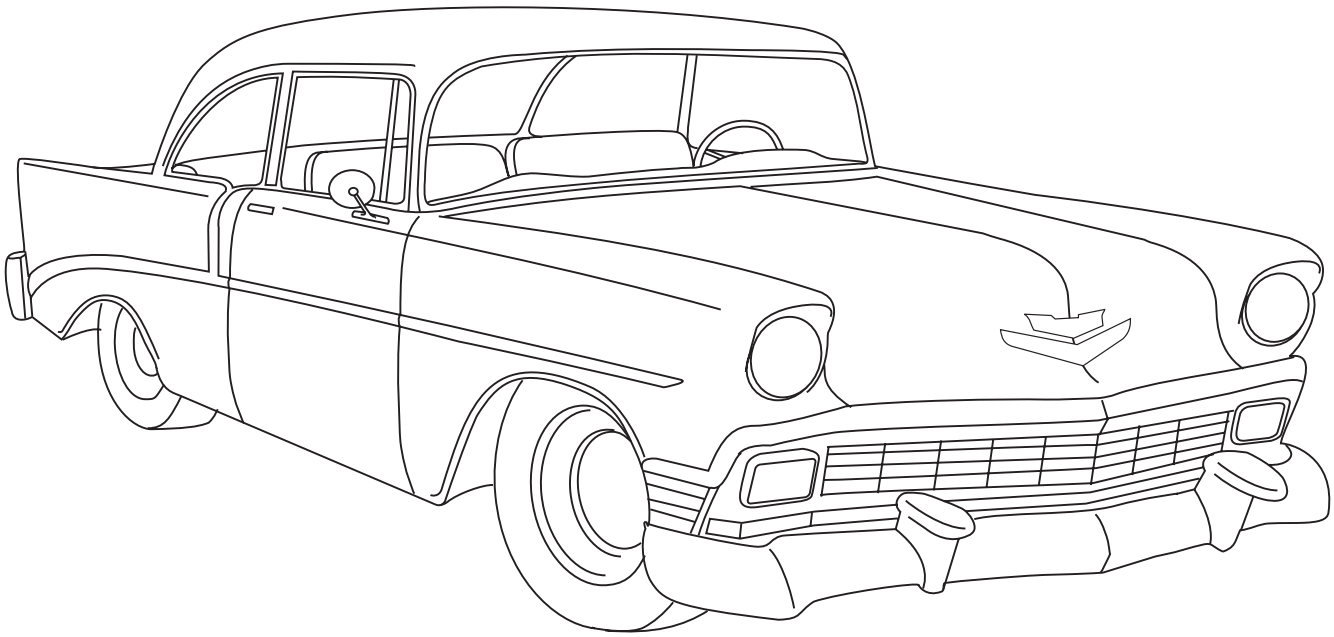

18865 GOLL ST. - SAN ANTONIO, TX. - 78266 ph.210-654-7171 - fax 210-654-3113

Table of Contents

PAGES

EVAPORATOR KIT PACKING LIST

EVAPORATOR KIT
56155-PCZ

No.	QTY.	PART No.	DESCRIPTION
1.	1	760155-VCE	1955-56 CHEV. EVAP. SUBCASE
2.	1	78255-PCN	1955-56 CHEV. CAR WO AC ACC. KIT

***** BEFORE BEGINNING INSTALLATION OPEN ALL PACKAGES AND CHECK CONTENTS OF SHIPMENT. PLEASE REPORT ANY SHORTAGES DIRECTLY TO VINTAGE AIR WITHIN 15 DAYS. AFTER 15 DAYS, VINTAGE AIR WILL NOT BE RESPONSIBLE FOR MISSING OR DAMAGED ITEMS.***

①

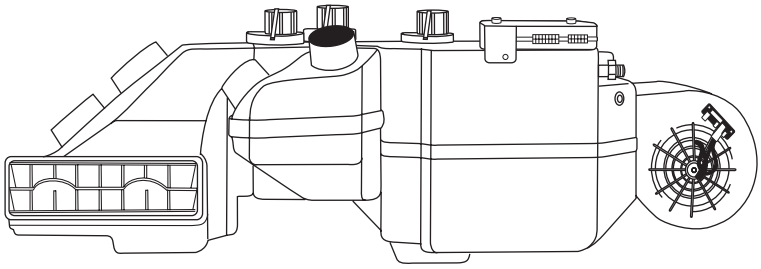

1955-56 CHEVY EVAP.
SUB CASE *760155-VCE*

②

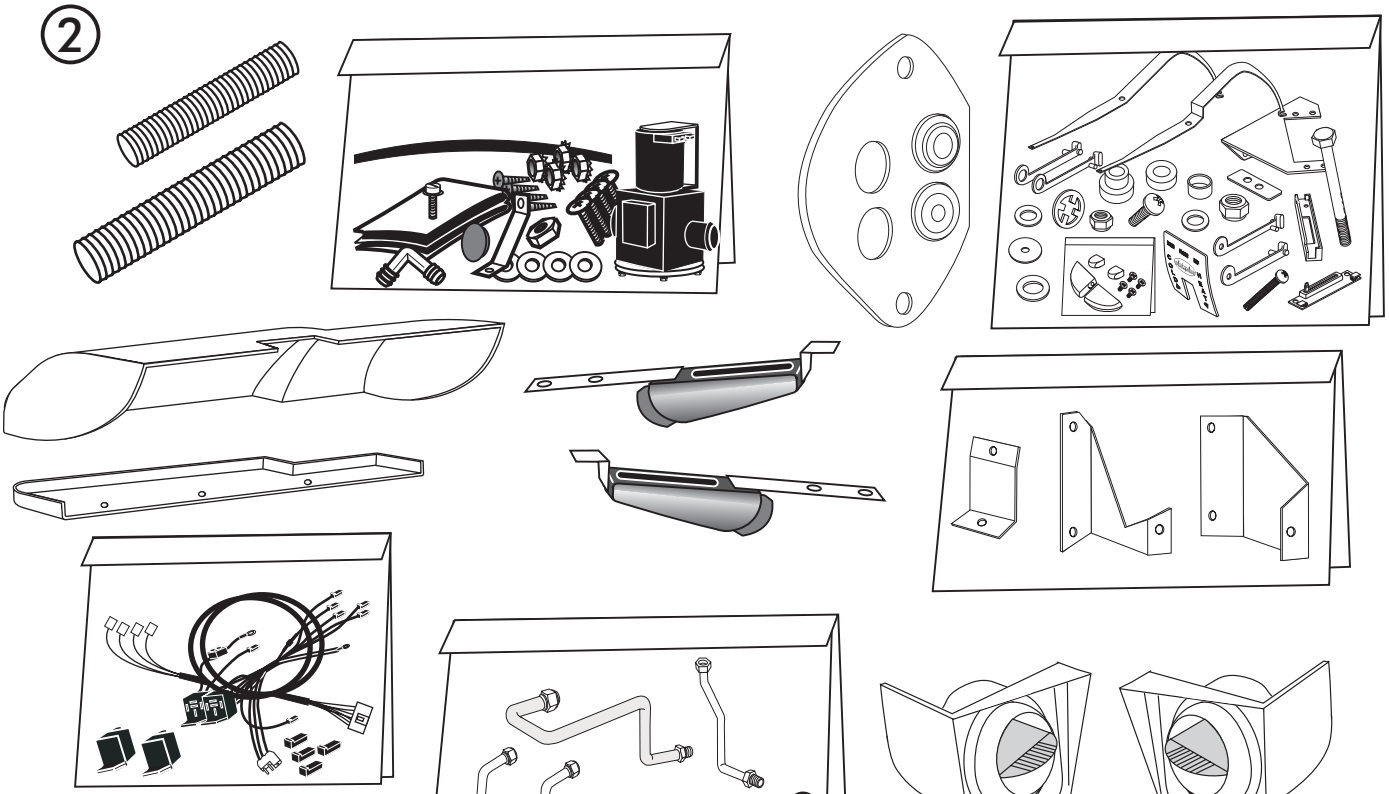

ACCESSORY KIT
78255-PCN

1955-56 CHEVROLET

GEN IV

IMPORTANT NOTICE-PLEASE READ

FOR MAXIMUM SYSTEM PERFORMANCE VINTAGE AIR RECOMMENDS THE FOLLOWING:

*18" HEAVY DUTY FAN - 32918-VUF
*1955-57 CHEVY FAN SHROUD (V/8 RADIATOR POSITION)- 37155-VCF, OR
1955-57 CHEVY FAN SHROUD (6 cyl. RADIATOR POSITION)-32057-VCF
*16" SPAL AUXILIARY CONDENSER FAN PACKAGE - 32007-VUF

THIS KIT DOES NOT CONTAIN HEATER HOSE. YOU MUST PURCHASE 8 FEET OF 5/8" DIA. HEATER HOSE FROM VINTAGE AIR(31800-VUD) OR FROM YOU LOCAL PARTS RETAILER

SAFETY SWITCHES:

YOUR VINTAGE AIR SYSTEM IS EQUIPPED WITH A BINARY PRESSURE SAFETY SWITCH. A BINARY SWITCH (11078-VUS) DISENGAGES THE COMPRESSOR CLUTCH IN CASE OF EXTREME LOW PRESSURE CONDITION (REFRIGERANT LOSS) OR EXCESSIVELY HIGH HEAD PRESSURE (406 lb.), TO PREVENT COMPRESSOR DAMAGE OR HOSE RUPTURE. A TRINARY SWITCH (11076-VUS) COMBINES HI/LO PRESSURE PROTECTION WITH AN ELECTRIC FAN OPERATION SIGNAL AT 254 lbs., AND MAY BE SUBSTITUTED FOR USE WITH ELECTRIC CONDENSER FANS. COMPRESSOR SAFETY SWITCHES ARE EXTREMELY IMPORTANT SINCE AN A/C SYSTEM RELIES ON REFRIGERANT TO CARRY LUBRICATION THROUGH THE SYSTEM.

SERVICE INFO:

EVACUATE THE SYSTEM FOR 35-45 MINUTES WITH SYSTEM COMPONENTS (DRIER, COMPRESSOR, EVAPORATOR AND CONDENSER) AT A TEMPERATURE OF AT LEAST 85° F. ON A COOL DAY THE COMPONENTS CAN BE HEATED WITH A HEAT GUN OR BY RUNNING THE ENGINE WITH THE HEATER ON BEFORE EVACUATING. LEAK CHECK AND CHARGE TO SPECIFICATIONS.

THE PROPER AMOUNT OF REFRIGERANT IS CRITICAL TO PROPER SYSTEM OPERATION. VINTAGE AIR RECOMMENDS OUR SYSTEMS BE CHARGED BY WEIGHT WITH A QUALITY CHARGING STATION OR SCALE.

REFRIGERANT CAPACITIES

134a SYSTEM

CHARGE WITH 1.8 lbs. (1lbs. 12ozs) OF REFRIGERANT

R-12 SYSTEM

CHARGE WITH 2.0 lbs. OF REFRIGERANT

LUBRICANT CAPACITIES

NEW COMPRESSOR - NO ADDITIONAL OIL NEEDED
USED COMPRESSOR - CONSULT VINTAGE AIR

IMPORTANT *WIRING* NOTICE-PLEASE READ

SOME VEHICLES MAY HAVE HAD SOME OR ALL OF THEIR RADIO INTERFERENCE CAPACITORS REMOVED. THERE SHOULD BE A CAPACITOR FOUND AT EACH OF THE FOLLOWING LOCATIONS:

1. ON THE POSITIVE TERMINAL OF THE IGNITION COIL
2. IF THERE IS A GENERATOR, ON THE ARMATURE TERMINAL OF THE GENERATOR
3. IF THERE IS A GENERATOR, ON THE BATTERY TERMINAL OF THE VOLTAGE REGULATOR

MOST ALTERNATORS HAVE A CAPACITOR INSTALLED INTERNALLY TO ELIMINATE WHAT IS CALLED 'WHINING' AS THE ENGINE IS REVVED. IF WHINING IS HEARD IN THE RADIO, OR JUST TO BE EXTRA CAUTIOUS, A RADIO INTERFERENCE CAPACITOR CAN BE ADDED TO THE BATTERY TERMINAL OF THE ALTERNATOR.

IT IS ALSO IMPORTANT THAT THE BATTERY LEAD IS IN GOOD SHAPE AND THAT THE GROUND LEADS ARE NOT COMPROMISED. THERE SHOULD BE A HEAVY GROUND FROM THE BATTERY TO THE ENGINE BLOCK, AND ADDITIONAL GROUNDS TO THE BODY AND TO THE CHASSIS.

IF THESE PRECAUTIONS ARE NOT OBSERVED, IT IS POSSIBLE FOR VOLTAGE SPIKES TO BE PRESENT ON THE BATTERY LEADS. THESE SPIKES COME FROM IGNITION SYSTEMS, CHARGING SYSTEMS, AND FROM TURNING SOME OF THE VEHICLE'S OTHER SYSTEMS ON AND OFF. MODERN COMPUTER OPERATED EQUIPMENT CAN BE SENSITIVE TO VOLTAGE SPIKES ON THEIR POWER LEADS, WHICH CAN CAUSE UNEXPECTED RESETS, STRANGE BEHAVIOR, AND MAY ALSO CAUSE PERMANENT DAMAGE.

VINTAGE AIR STRIVES TO HARDEN THEIR PRODUCTS AGAINST THESE TYPES OF ELECTRICAL NOISE, BUT THERE IS A POINT WHERE A VEHICLE'S ELECTRICAL SYSTEM CAN BE DEGRADED SO MUCH THAT NOTHING CAN HELP.

RADIO INTERFERENCE CAPACITORS SHOULD BE AVAILABLE AT MOST AUTO & TRUCK PARTS SUPPLIERS. THEY TYPICALLY ARE CYLINDRICAL IN SHAPE, A LITTLE OVER AN INCH LONG, A LITTLE OVER A HALF INCH IN DIAMETER, THEY HAVE A SINGLE LEAD COMING FROM ONE END OF THE CYLINDER WITH A TERMINAL ON THE END OF THE WIRE, AND THEY WILL HAVE A MOUNTING CLIP WHICH IS SCREWED INTO A GOOD GROUND ON THE VEHICLE. THE SPECIFIC VALUE OF THE CAPACITANCE IS NOT TOO SIGNIFICANT, IN COMPARISON TO IGNITION CAPACITORS THAT ARE MATCHED WITH THE COIL TO REDUCE PITTING.

- CARE MUST BE TAKEN WHEN INSTALLING THE COMPRESSOR LEAD, NOT TO SHORT IT TO GROUND. THE COMPRESSOR LEAD MUST NOT BE CONNECTED TO A CONDENSER FAN OR ANY OTHER AUXILIARY DEVICE. SHORTING TO GROUND OR CONNECTING TO A CONDENSER FAN OR ANY OTHER AUXILIARY DEVICE WILL CAUSE SEVERE DAMAGE TO THE ECU.
- WHEN INSTALLING GROUND LEADS ON GEN IV SYSTEMS, THE BLOWER CONTROL GROUND AND ECU GROUND MUST BE CONNECTED DIREECTLY TO THE NEGATIVE BATTERY POST.
- THE HEATER CONTROL VALVE IS A NORMALLY OPEN VALVE. IT MUST BE CONNECTED TO THE ECU TO BLOCK WATER FLOW IN AC MODE.

INSTALLATION INSTRUCTIONS FOR 1955-1956 CHEVROLET

BEFORE STARTING THE AIR CONDITIONER INSTALLATION, CHECK FOR PROPER OPERATION OF ALL COMPONENTS (RADIO, LIGHTS, WIPERS, ETC.). STUDY THE INSTRUCTIONS, ILLUSTRATIONS AND DIAGRAMS. FOR EASE OF INSTALLATION CHECK OFF (☑) EACH PROCEDURE PRIOR TO MOVING ON TO THE NEXT STEP.

ENGINE COMPARTMENT

- ☐ DISCONNECT BATTERY AND REMOVE
- ☐ REMOVE BATTERY TRAY
- ☐ REMOVE AIR CLEANER
- ☐ DRAIN RADIATOR
- ☐ DISCONNECT HEATER HOSES

PASSENGER COMPARTMENT

1. ☐ REMOVE OEM HEATER ASSEMBLY, INCLUDES: CONTROL CABLES, TWO (2) 7/16" NUTS ON FIREWALL AND ONE (1) UNDER DASH (DISCARD).
2. ☐ REMOVE HEATER BLOWER (DISCARD). SEE FIGURE 1 BELOW.
3. ☐ REMOVE DUCT ABOVE KICK PANEL VENT WITH BUTTERFLY AND PANEL FLANGE (DISCARD). INSTALL NEW VENT COVER AS FIGURE 2 SHOWS.
4. ☐ REMOVE GLOVE BOX DOOR (RETAIN).
5. ☐ REMOVE GLOVE BOX (DISCARD).
6. ☐ REMOVE THE ORIGINAL DEFROSTER DUCT FROM HEATER TO WINDSHIELD (DISCARD).
7. ☐ REMOVE ASH TRAY (RETAIN).
8. ☐ REMOVE ASH TRAY SLIDER ASSEMBLY (RETAIN).
9. ☐ REMOVE VENT & CABLE FROM DASH (RETAIN. SEE FIGURE 1 BELOW.
10. ☐ REMOVE CONTROL PANEL (RETAIN), REFER TO CONTROL PANEL CONVERSION KIT TO ASSEMBLE CONTROL PANEL.
11. ☐ REMOVE PASSENGER SIDE SPEAKER GRILLE (RETAIN). SEE FIGURE 1 BELOW.

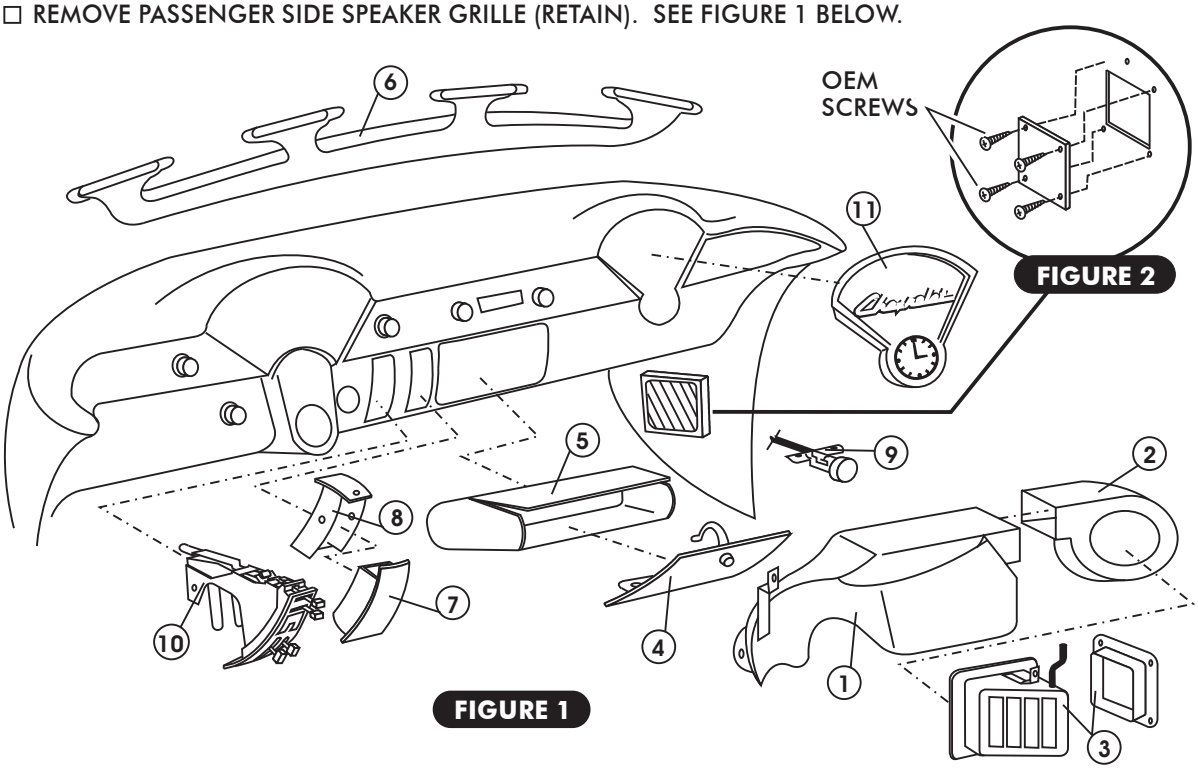

FIGURE 1

CONDENSER ASSEMBLY

- ☐ LOOSEN THE SIX BOLTS THAT SECURE THE RADIATOR TO THE CORE SUPPORT.
- ☐ SLIDE THE CONDENSER ASSEMBLY INTO POSITION. THE CONDENSER BRACKETS WILL BE HELD BETWEEN THE RADIATOR AND CORE SUPPORT, SECURED WITH THE SIX RADIATOR BOLTS. SEE FIGURE 3 & 3b BELOW. HOLDING THE CONDENSER IN POSITION, TIGHTEN THE SIX RADIATOR BOLTS.

CORE SUPPORT

- ☐ LOCATE THE TEMPLATE ON PAGE 23, AND ALIGN THIS TEMPLATE ON THE PASSENGER SIDE CORE SUPPORT PANEL. USING THE TEMPLATE, MARK HOLES AND CUT THE 1 1/4" HOLE, USING A HOLE SAW. DRILL THE 5/16" HOLE IN NOTED LOCATION. SEE FIGURE 3a BELOW.
- ☐ INSTALL THE #6 AND #8 CONDENSER LINES THROUGH 1 1/4" HOLE . LUBRICATE O-RINGS (SEE FIGURES 10 & 11, PAGE 12) AND CONNECT LINES TO CONDENSER
- ☐ LOCATE THE SPLIT GROMMET AND INSTALL AS SHOWN IN FIGURE 3b, BELOW.
- ☐ INSTALL DRIER LOOSELY AS SHOWN IN FIGURE 3b BELOW.
  NOTE: REFRIGERANT FLOW. (ARROW ON DRIER)

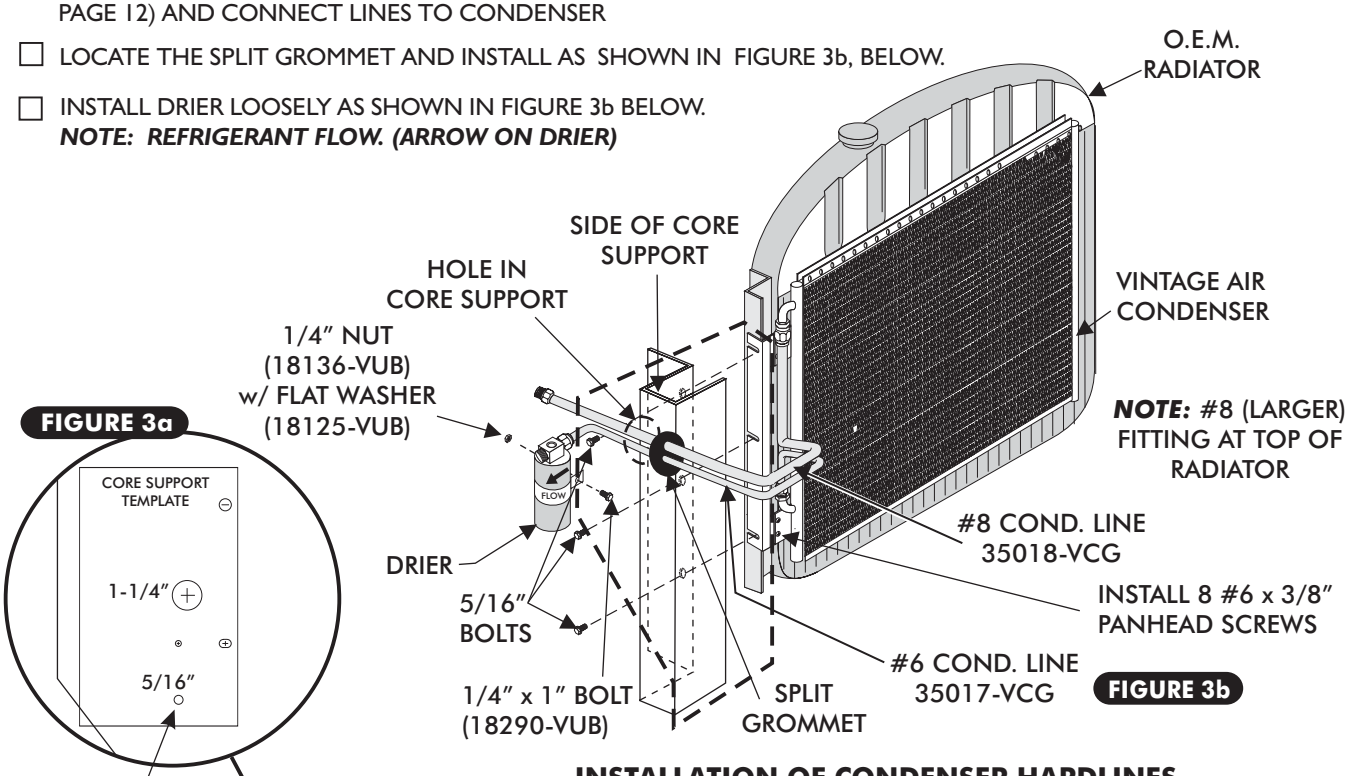

INSTALLATION OF CONDENSER HARDLINES

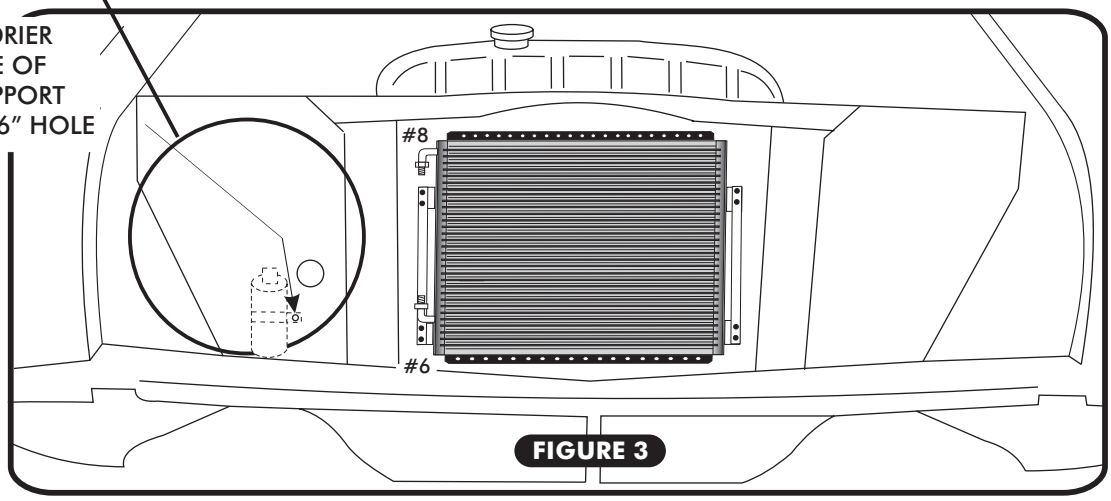

FIGURE 3

COMPRESSOR & BRACKETS

☐ REFER TO SEPARATE INSTRUCTIONS INCLUDED WITH THE BRACKET KIT TO INSTALL THE COMPRESSOR BRACKET. REFER TO FIGURE 4 BELOW FOR COMPRESSOR MOUNTING POSITION.

PULLEYS

☐ IN MOST INSTANCES EXISTING BELT LENGTHS WILL REMAIN THE SAME. SEE FIGURE 4 BELOW.

PULLEYS (VINTAGE AIR) SHORT PUMP SMALL BLOCK CHEVY (STEEL PULLEY)

22503-VCA - WATER PUMP PULLEY *(DOUBLE GROOVE)*

22506-VCA - CRANKSHAFT PULLEY *(DOUBLE GROOVE)* *(WITH POWER STEERING A 3 GROOVE CRANK PULLEY IS REQUIRED)*

22507-VCA - CRANKSHAFT PULLEY *(TRIPLE GROOVE)*

NOTE: BELT ROUTING MAY VARY WITH DIFFERENT BRACKET SETS. ALWAYS REFER TO INSTRUCTIONS INCLUDED WITH BRACKETS.

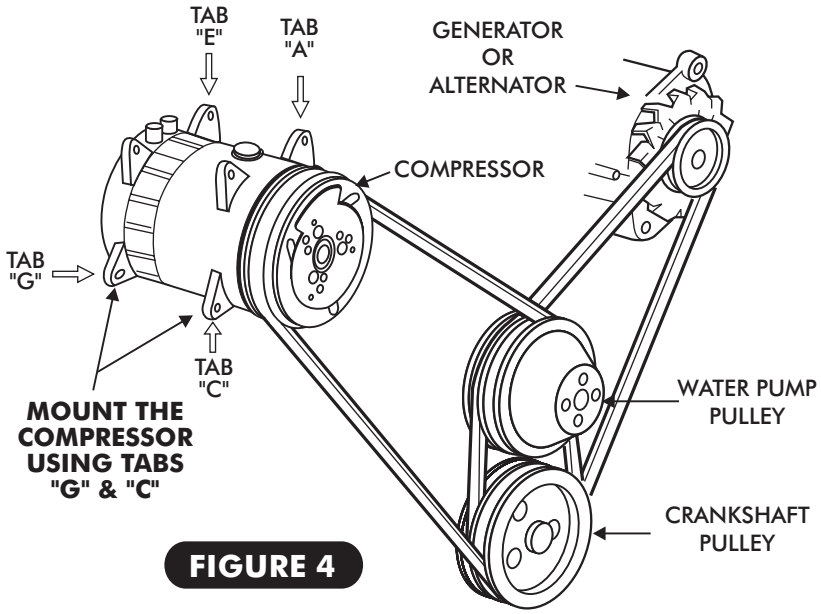

FIGURE 4

DEFROST DUCT INSTALLATION

☐ INSTALL DEFROST DUCTS WITH 2" DUCT HOSE (PASSENGER SIDE) 2" x 10" (DRIVER SIDE) 2" x 24" SEE FIGURE 5 BELOW & FIGURE 15, PAGE 16

INSTALL THE DEFROSTER DUCTS AT THIS TIME. SEE FIGURE 5 & 5a.
NOTE: ROUNDED SIDE OF DUCTS FACE PASSENGER AREA.

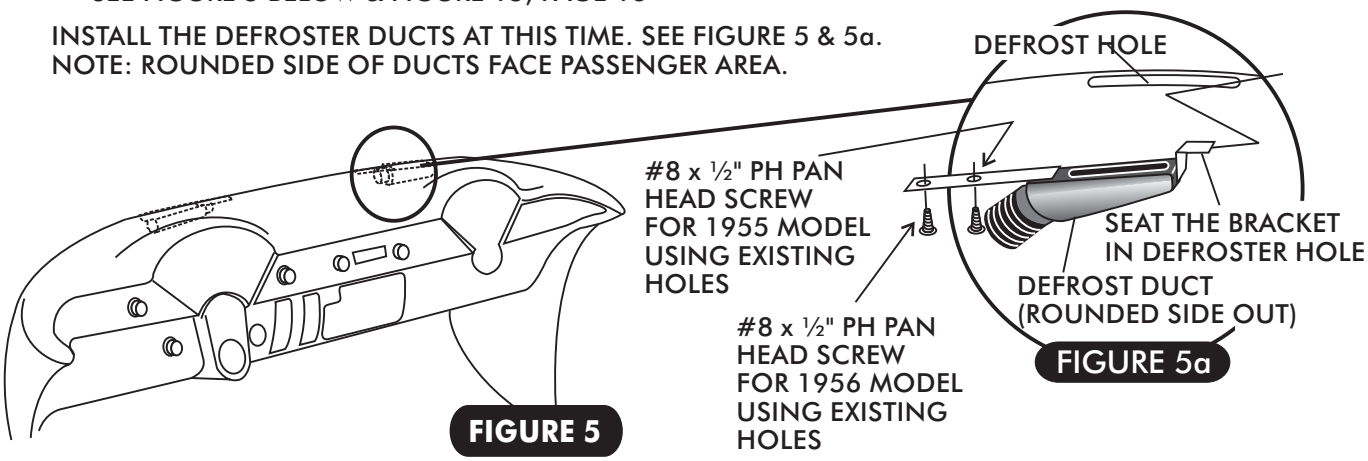

FIGURE 5a

FIGURE 5

CONTROL PANEL CONVERSION

☐ LOCATE THE CONTROL PANEL CONVERSION KIT (473055-PCA), REFER TO INSTRUCTIONS SUPPLIED WITH CONVERSION KIT TO ASSEMBLE CONTROL PANEL.

EVAPORATOR INSTALLATION

- ☐ ON A WORK BENCH, INSTALL EVAPORATOR REAR BRACKETS, AND INSTALL EVAPORATOR HARDLINES WITH PROPERLY LUBRICATED O-RINGS. (SEE FIGURE 17, PAGE 18, AND FIGURES 10, 11 & 12, PAGE 12.)
- ☐ LIFT EVAPORATOR UNIT UP & UNDER THE DASHBOARD (SEE FIGURES 6-6a BELOW & FIGURE 6b, PAGE 10). SECURE LOOSELY TO THE FIREWALL FROM THE ENGINE COMPARTMENT SIDE WITH (2) 1/4-20 x 1" BOLTS AND WASHERS. SEE FIGURE 7, PAGE 10 & FIGURE 17, PAGE 18.
- ☐ INSTALL FRONT MOUNTING BRACKET TO EVAPORATOR UNIT WITH 1/4-20 x 1/2" BUTTON HEAD BOLT AND TIGHTEN AS SHOWN IN FIGURE 7, PAGE 10. LOOSELY ATTACH FRONT MOUNTING BRACKET TO DASH WITH 1/4-20 x 1" BOLT, WASHER AND NUT. SEE FIGURE 7, PAGE 10
- ☐ INSTALL CENTER A/C PLENUM TO EVAPORATOR WITH (2) 10/32 x 1/2" SCREWS. SEE FIGURE 7, PAGE 10.
- ☐ LOOSELY SECURE THE CENTER PLENUM TO DASH WITH THE CENTER PLENUM MOUNTING BRACKET, USING A 1/4-20 x 1" BOLT AND WASHER. SEE FIGURE 7, PAGE 10
- ☐ VERIFY THAT EVAPORATOR UNIT IS LEVEL AND SQUARE TO THE DASH, THEN TIGHTEN ALL MOUNTING BOLTS. (***NOTE**: TIGHTEN THE TWO BOLTS ON FIREWALL FIRST, THEN THE FRONT MOUNTING BRACKET BOLT AND NUT. TIGHTEN THE CENTER PLENUM MOUNTING BOLT LAST*).

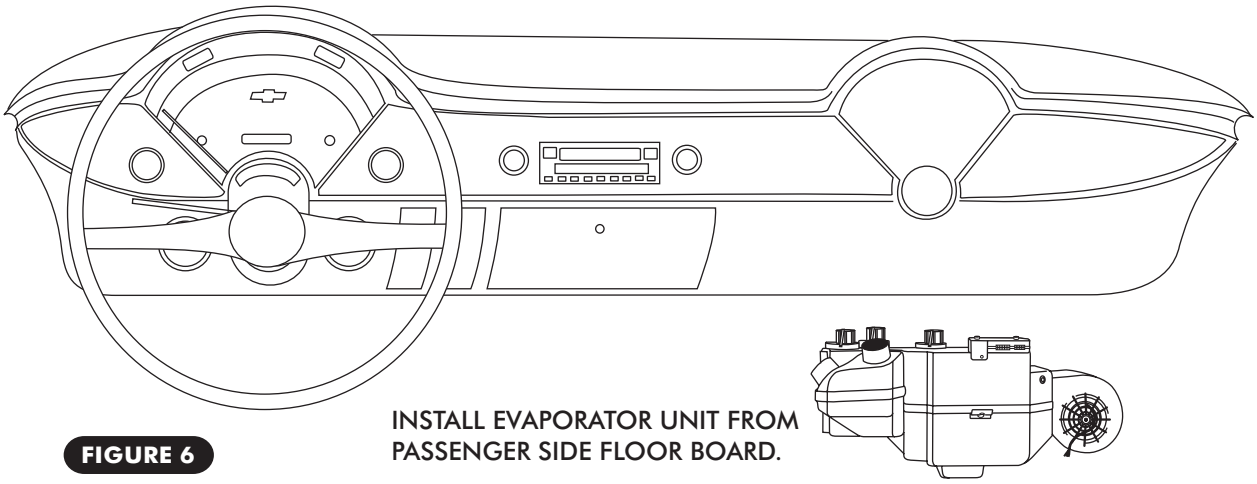

INSTALL EVAPORATOR UNIT FROM PASSENGER SIDE FLOOR BOARD.

FIGURE 6

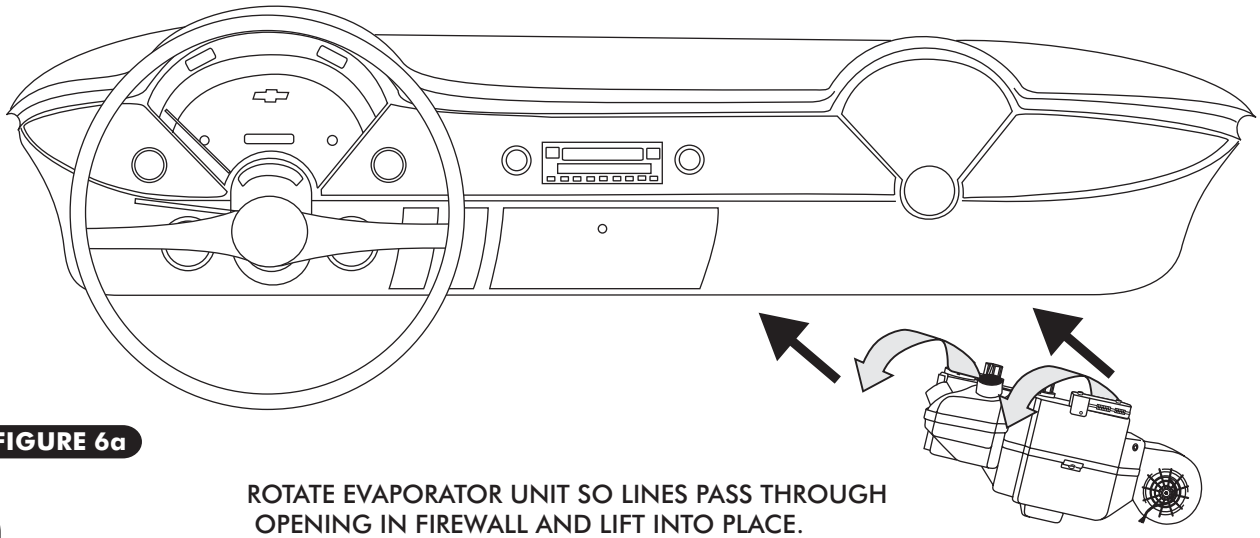

FIGURE 6a

ROTATE EVAPORATOR UNIT SO LINES PASS THROUGH OPENING IN FIREWALL AND LIFT INTO PLACE.

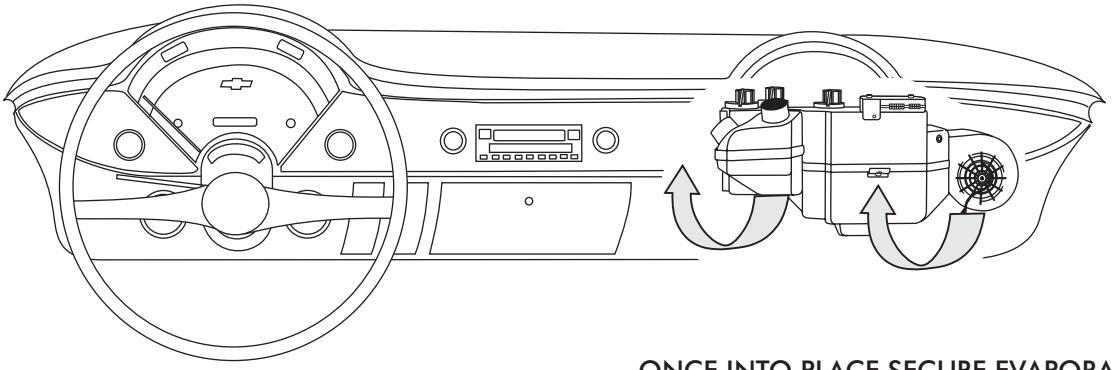

ONCE INTO PLACE SECURE EVAPORATOR UNIT TO FIREWALL.

FIGURE 6b

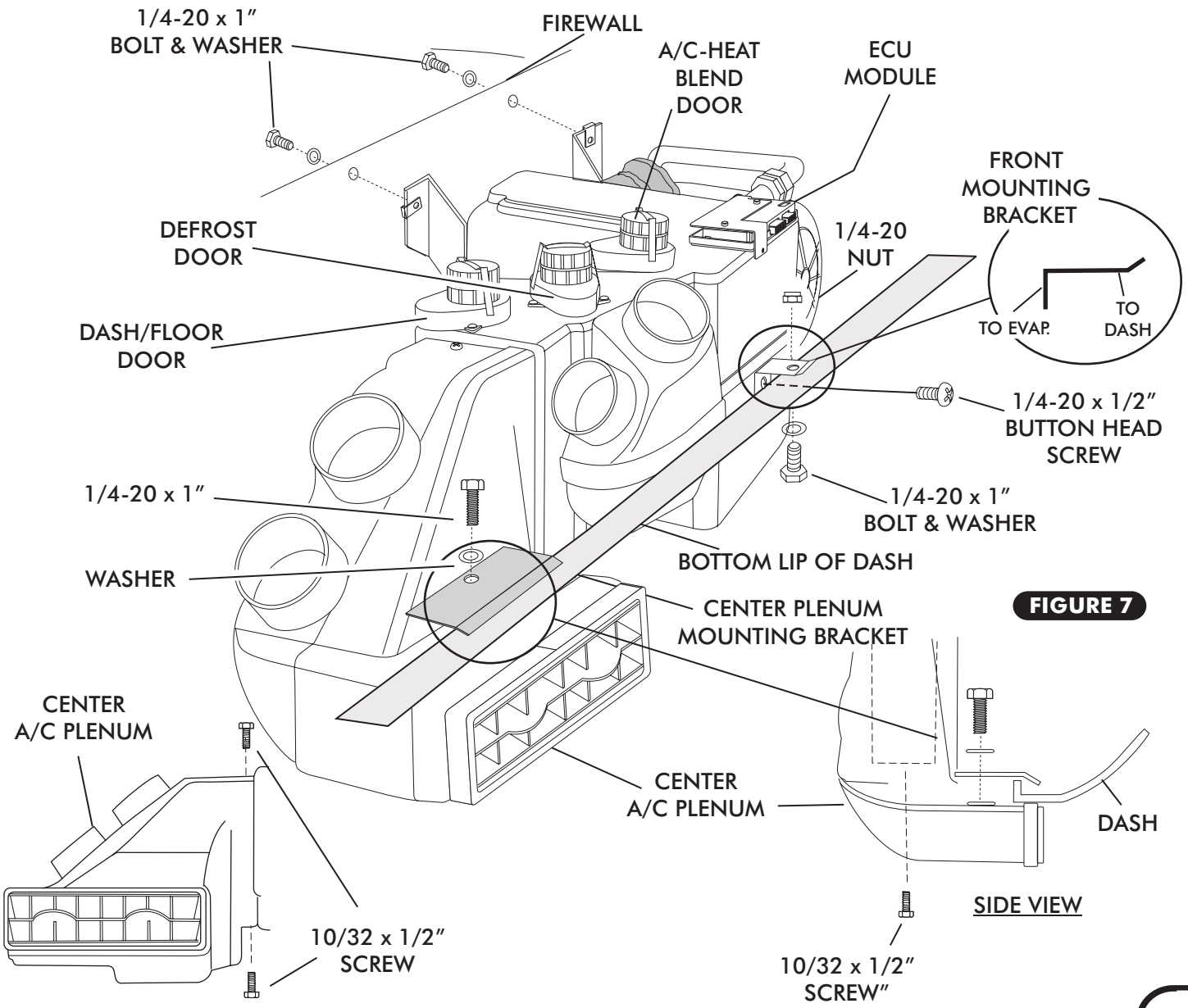

FIGURE 7

PASSENGER AND DRIVER SIDE UNDER DASH LOUVER INSTALLATION

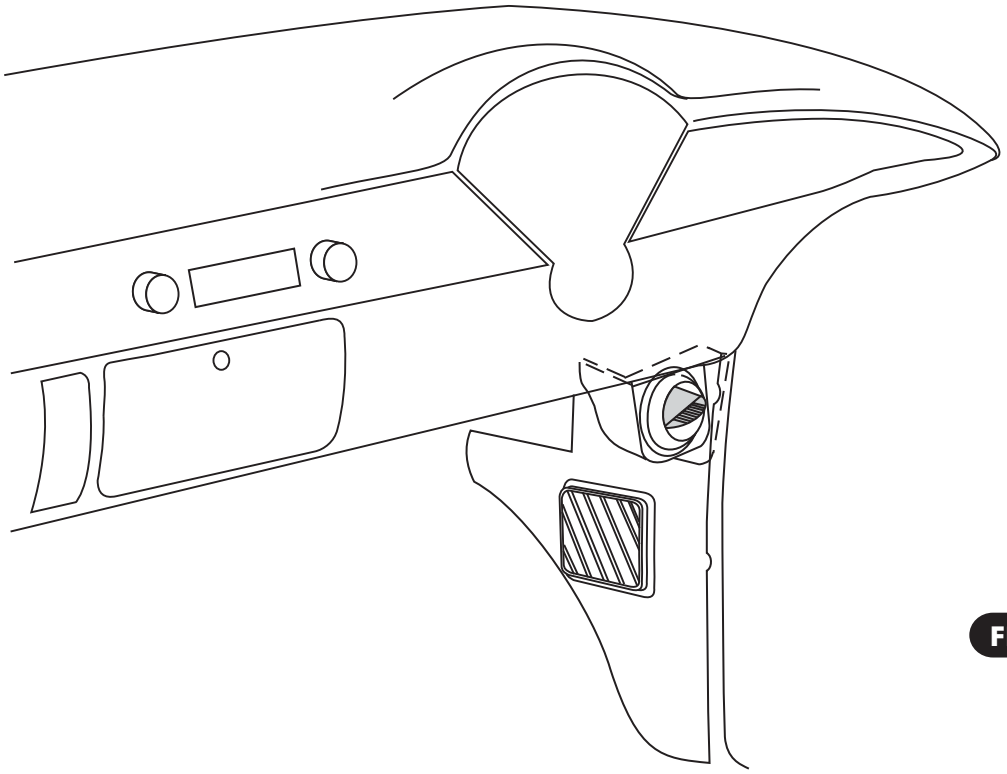

FIGURE 8

- ☐ INSTALL PASSENGER AND DRIVER SIDE BALL LOUVERS BY SLIDING THE SIDE FLANGE OF BALL LOUVER BETWEEN THE KICK PANEL AND KICK PANEL RETAINING STRIP.
- ☐ SLIDE LOUVER UP TOWARDS BOTTOM OF DASH UNTIL THE LOUVER IS SEATED AGAINST DASH, AND SECURE TO KICK PANEL WITH SUPPLIED #8 x 1/2" PANHEAD SCREW. SEE FIGURE 8 ABOVE.

DRAIN HOSE INSTALLATION

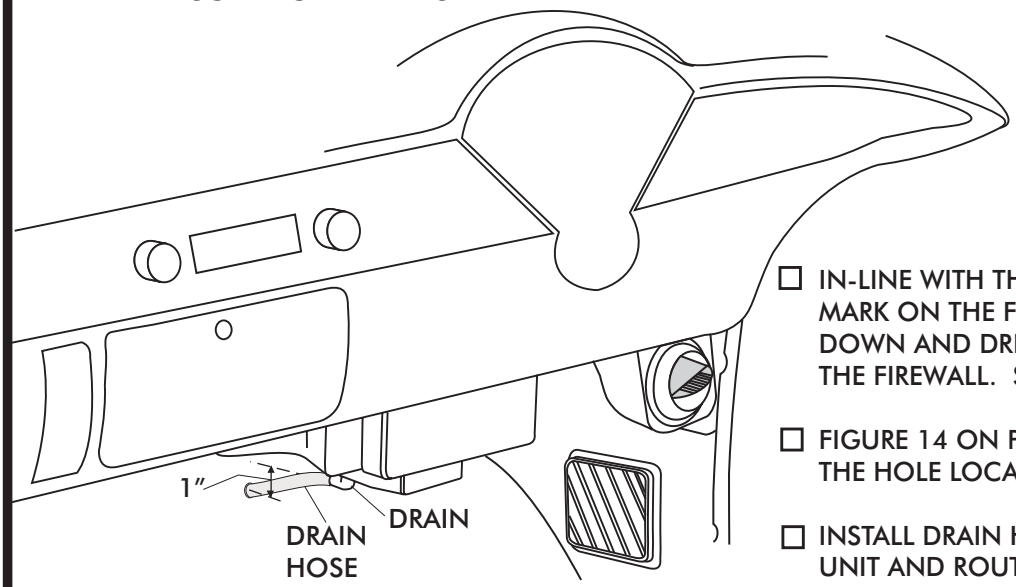

FIGURE 9

- ☐ IN-LINE WITH THE DRAIN, LIGHTLY MAKE A MARK ON THE FIREWALL. MEASURE ONE INCH DOWN AND DRILL A 5/8" HOLE THROUGH THE FIREWALL. SEE FIGURE 9.
- ☐ FIGURE 14 ON PAGE 15 WILL SHOW YOU ROUGHLY THE HOLE LOCATION.
- ☐ INSTALL DRAIN HOSE TO BOTTOM OF EVAPORATOR UNIT AND ROUTE THROUGH FIREWALL. SEE FIGURE 9 AND FIGURE 14, PAGE 15.

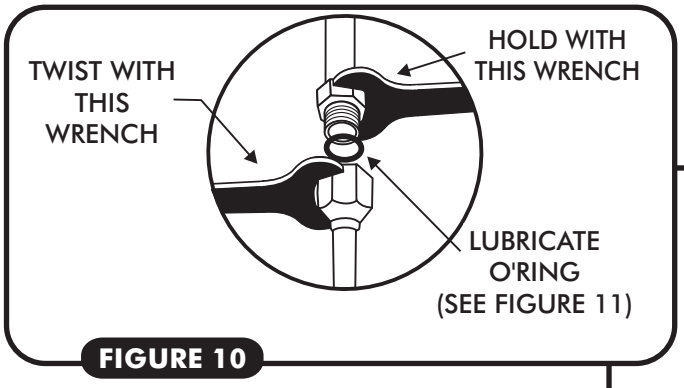

FIGURE 10

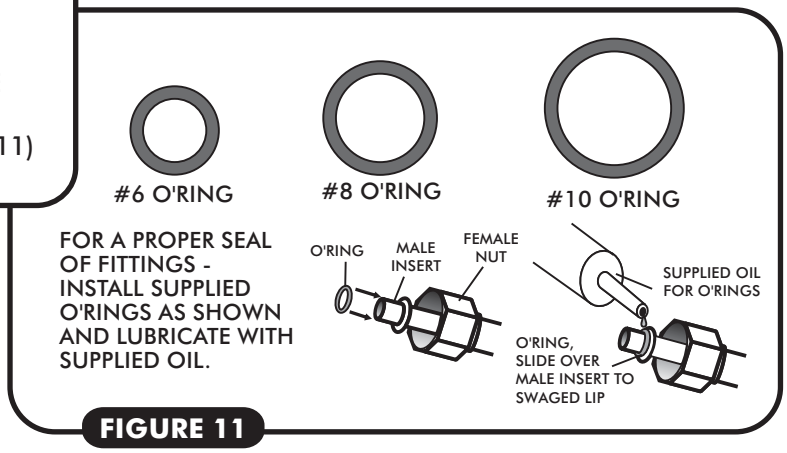

FIGURE 11

HEATER CONTROL VALVE INSTALLATION

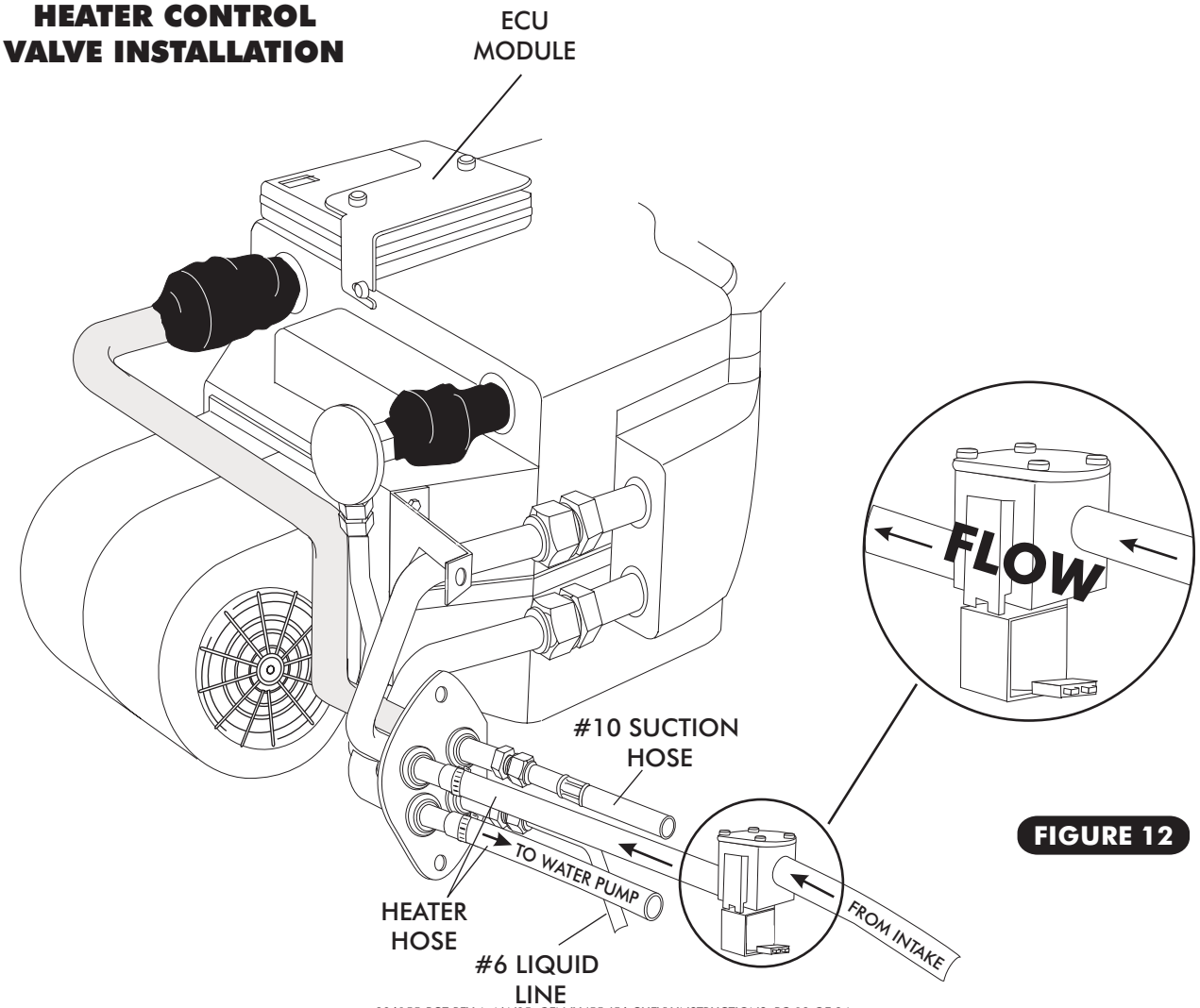

FIGURE 12

HARDLINE & HOSE INSTALLATION

STANDARD HOSE KIT

- ☐ LOCATE THE TWO COMPRESSOR ALUMINUM HARDLINE EXTENSIONS. SEE FIGURE 13, PAGE 14.
- ☐ LOCATE THE #8 COMPRESSOR ALUMINUM HARDLINE. LUBRICATE (1) #8 O-RING AND INSTALL ON THE FEMALE O-RING END. CONNECT THIS LINE TO THE #8 DISCHARGE PORT ON THE COMPRESSOR, AND TIGHTEN. SEE FIGURES 10 & 11, PAGE 12.
- ☐ LOCATE THE #10 COMPRESSOR ALUMINUM HARDLINE. LUBRICATE (1) #10 O-RING AND INSTALL ON THE FEMALE O-RING END. CONNECT THIS LINE TO THE #10 SUCTION PORT ON THE COMPRESSOR, AND TIGHTEN. SEE FIGURE 13, PAGE 14.
- ☐ SECURE THE TWO COMPRESSOR HARDLINES TO THE COMPRESSOR, USING THE SUPPLIED CLAMP. SEE FIGURE 13a, PAGE 14.
- ☐ LOCATE THE #8 RUBBER HOSE. THIS HOSE WILL CONNECT TO THE #8 ALUMINUM COMPRESSOR HARDLINE AND #8 ALUMINUM HARDLINE FROM CONDENSER. LUBRICATE (2) #8 O-RINGS, AND INSTALL ONE ON EACH END OF THE #8 RUBBER HOSE. ROUTE HOSE AS SHOWN IN FIGURE 13, PAGE 14 AND TIGHTEN. ***NOTE: THE 90° DEGREE HOSE END CONNECTS TO THE CONDENSER HARDLINE .***
- ☐ INSTALL FIREWALL COVER. SEE FIGURE 14, PAGE 15.
- ☐ INSTALL THE #6 LIQUID LINE, LUBRICATE (1) #6 O-RING AND TIGHTEN. SEE FIGURE 13b, PAGE 14.
- ☐ LOCATE THE #10 RUBBER HOSE. THIS HOSE WILL CONNECT TO THE #10 ALUMINUM COMPRESSOR HARDLINE AND #10 ALUMINUM HARDLINE FROM EVAPORATOR. LUBRICATE (2) #10 O-RINGS, AND INSTALL ONE ON EACH END OF THE #10 RUBBER HOSE. ROUTE HOSE AS SHOWN IN FIGURE 13, PAGE 14 AND TIGHTEN. ***NOTE: THE 90° DEGREE HOSE END CONNECTS TO THE COMPRESSOR HARDLINE.***
- ☐ INSTALL HEATER HOSES TO HEATER LINES AND ROUTE AS SHOWN IN FIGURE 13-13b, PAGE 14. SECURE WITH HOSE CLAMPS. ***NOTE: THIS KIT DOES NOT CONTAIN HEATER HOSE. YOU MUST PURCHASE 5/8" DIA. HEATER HOSE FROM YOUR LOCAL PARTS RETAILER.***

MODIFIED HOSE KIT

- ☐ REFER TO SEPARATE INSTRUCTIONS INCLUDED WITH MODIFIED HOSE KIT.

HEATER CONTROL VALVE & #6 LIQUID LINE

- ☐ INSTALL HEATER CONTROL VALVE IN-LINE WITH INTAKE MANIFOLD (PRESSURE SIDE) HEATER HOSE. SEE FIGURE 12, PAGE 12.
- ☐ INSTALL THE #6 LIQUID LINE TO DRIER WITH LUBRICATED O-RING AND TIGHTEN. FIGURE 13, PAGE 14
- ☐ INSTALL BINARY SWITCH ON #6 LIQUID LINE. SEE FIGURE 13, PAGE 14.
- ☐ SECURE THE #6 LIQUID LINE TO THE FENDER USING THE SUPPLIED ADEL CLAMP. SEE FIGURE 13, PAGE 14.

AC/HEAT HOSE & LINE ROUTING

ECU MODULE
PRESS TAPE
EVAPORATOR SUB CASE
HEATER HOSES
HEATER CONTROL VALVE
EXPANSION VALVE
FIREWALL COVER
BINARY SWITCH
#10 RUBBER SUCTION HOSE
ADEL CLAMP
#8 RUBBER HOSE
#6 LIQUID LINE FROM EXPANSION VALVE TO DRIER (09154-PFL)
#8 COND. LINE 35018-VCG
#6 HARDLINE 35017-VCG
SPLIT RUBBER GROMMET IN HOLE IN CORE SUPPORT

NOTE: COMPRESSOR HARDLINES ARE INCLUDED WITH STANDARD HOSE KIT ONLY.

#8 COMPRESSOR ALUMINUM HARDLINE EXT. (DISCHARGE SIDE) 35038-VUG-A

#10 COMPRESSOR ALUMINUM HARDLINE EXT. (SUCTION SIDE) 35037-VUG-A

BINARY SWITCH INSTALLATION
#6 LIQUID LINE

FIGURE 13

NOTE: MODIFIED HOSE KITS INCLUDE 2 - 135° COMPRESSOR FITTINGS. (REFER TO MODIFIED HOSE KIT INSTRUCTIONS INCLUDED WITH HOSE KIT.)

FIGURE 13a

ALUMINUM CLAMP ***(STANDARD HOSE KIT ONLY)***

ECU MODULE
#10 SUCTION LINE (INSULATED)
FIREWALL COVER
O-RING
#10 SUCTION HOSE
#6 LIQUID LINE
HEATER HOSE

FIGURE 13b

FIREWALL COVER

☐ PASS LINES THROUGH FIREWALL COVER, AND SECURE WITH (2) 1/4-20 BOLTS. SEE FIGURE 14 BELOW.

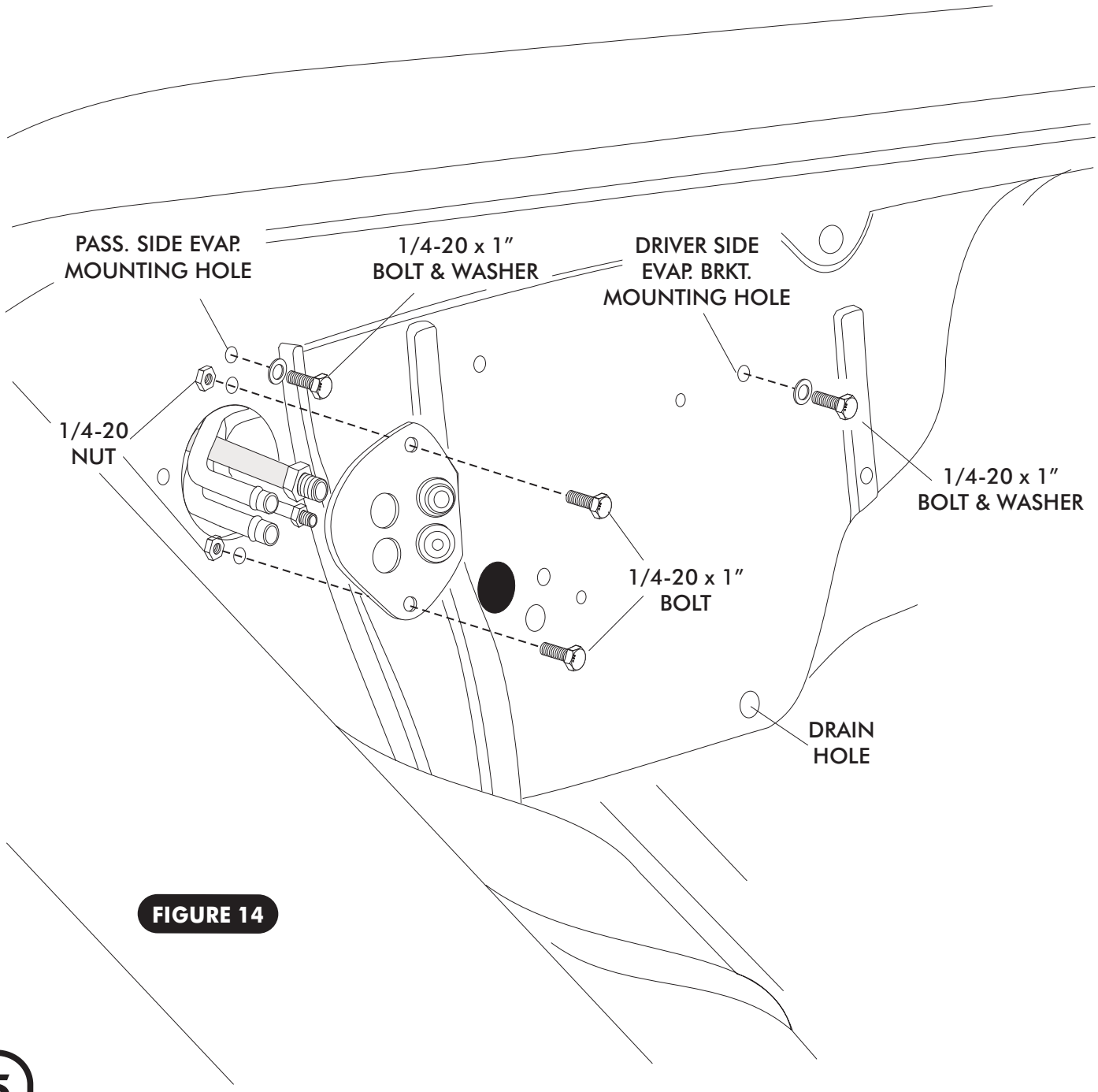

FIGURE 14

FINAL STEPS - DUCT HOSE ROUTING & CONTROL PANEL HARNESS

- ☐ INSTALL DUCT HOSES AS SHOWN IN FIGURE 15 BELOW.
- ☐ REMOVE THE CONTROL PANEL KNOBS AND BEZEL.
- ☐ FROM THE BACK SIDE OF THE DASH, INSTALL THE CONTROL PANEL ASSEMBLY THROUGH THE CONTROL PANEL OPENING IN DASH AS SHOWN IN FIGURE 15 BELOW.
- ☐ REINSTALL BEZEL AND CONTROL KNOBS.
- ☐ PLUG THE CONTROL PANEL HARNESS INTO THE ECU MODULE ON SUB CASE AS SHOWN. SEE FIGURE 15 BELOW.
- ☐ CONNECT THE CONTROL HARNESS TO THE CONTROL POTS AS SHOWN BELOW.
- ☐ PLUG THE WIRING HARNESS INTO THE ECU MODULE ON SUB CASE AS SHOWN. (WIRE ACCORDING TO WIRING DIAGRAM ON PAGE 19.)

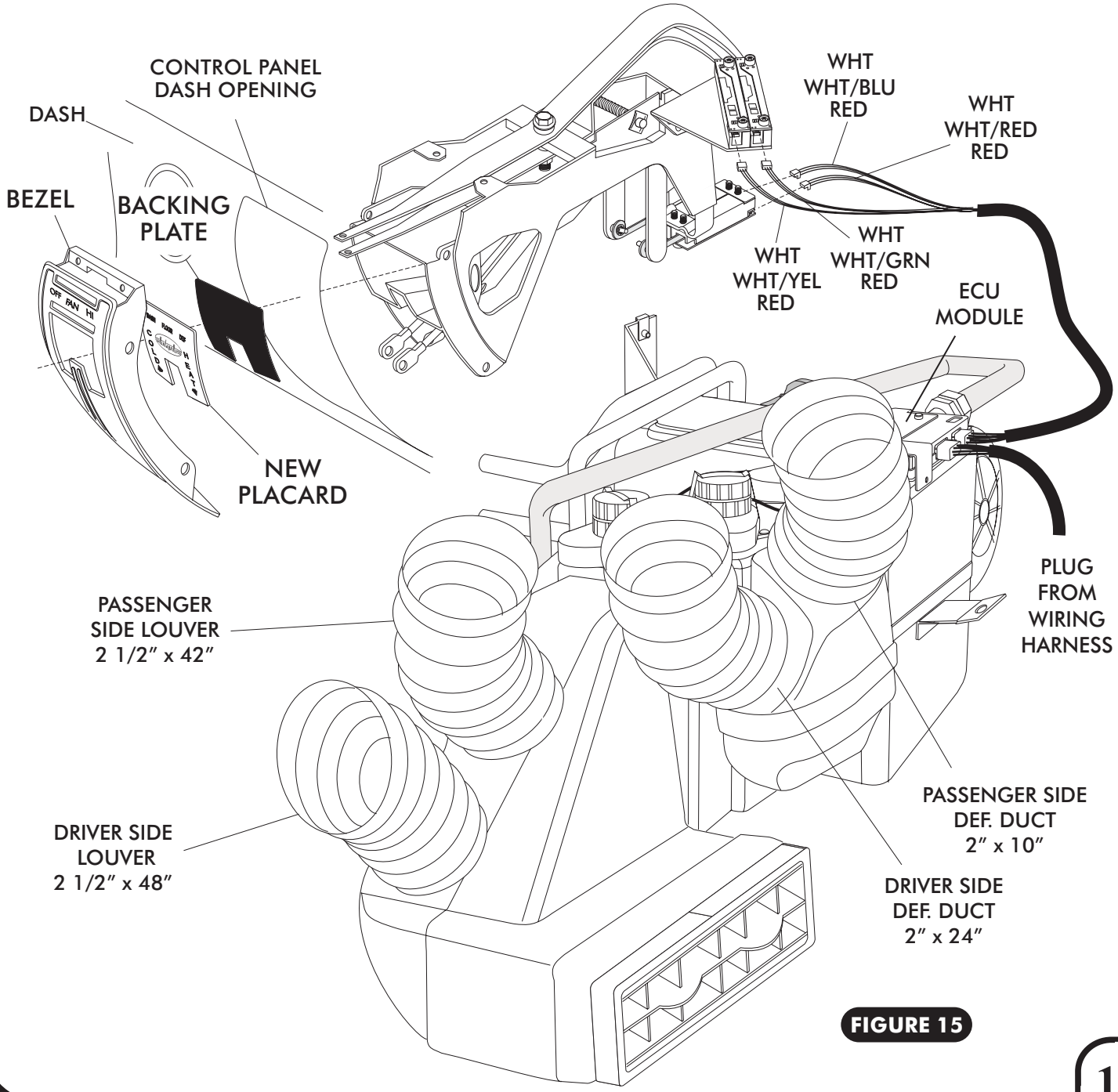

FIGURE 15

- ☐ INSTALL GLOVE BOX BOTTOM AND GLOVE BOX DOOR, SECURE TO DASH WITH (3) O.E.M. SCREWS. SEE FIGURE 16, BELOW.
- ☐ WITH GLOVE BOX BOTTOM AND DOOR IN PLACE, INSTALL GLOVE BOX TOP AS SHOWN, SECURE THE GLOVE BOX TOP AND BOTTOM TOGETHER USING (3) 6 x 3/8" PAN HEAD SCREWS AS SHOWN.
- ☐ SECURE THE GLOVE BOX TOP TO DASH USING (2) OEM SCREWS, SEE FIGURE 16 BELOW.

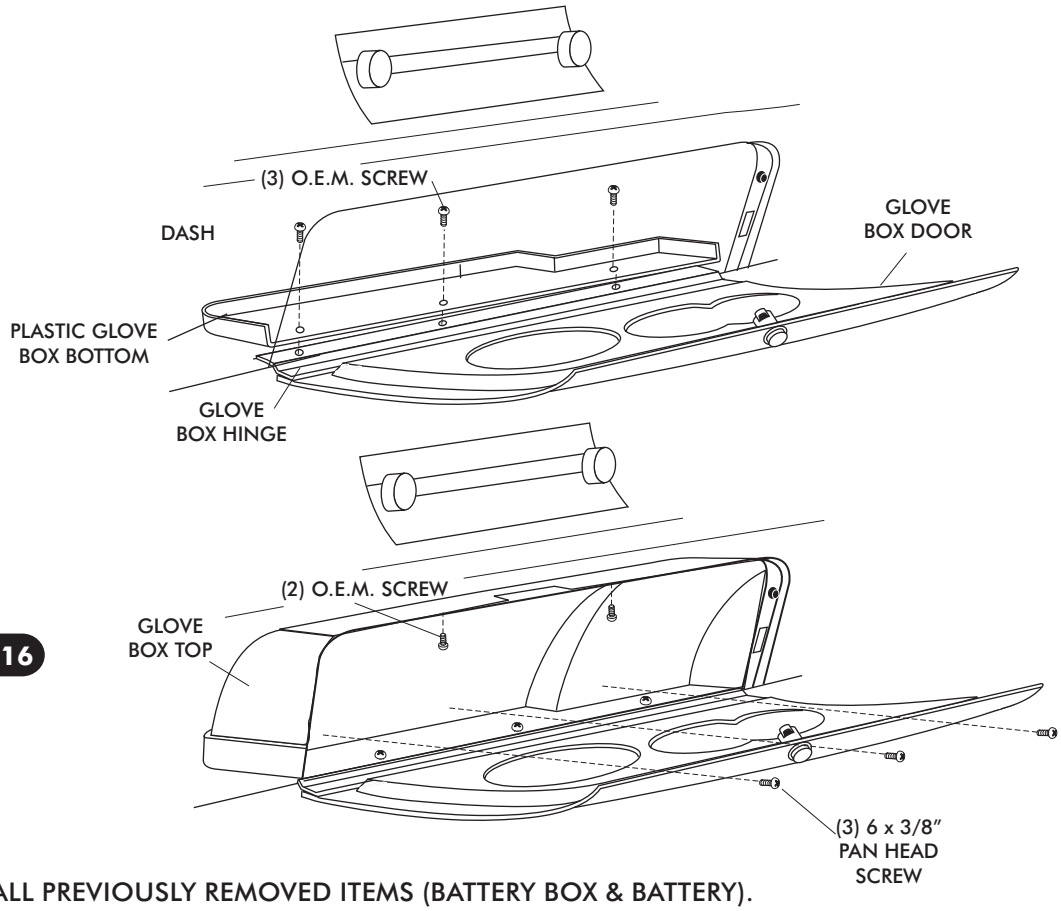

FIGURE 16

- ☐ REINSTALL ALL PREVIOUSLY REMOVED ITEMS (BATTERY BOX & BATTERY).
- ☐ FILL RADIATOR WITH AT LEAST A 50/50 MIXTURE OF APPROVED ANTIFREEZE AND WATER. IT IS THE OWNER'S RESPONSIBILITY TO KEEP THE FREEZE PROTECTION AT THE PROPER LEVEL FOR THE CLIMATE IN WHICH THE VEHICLE IS OPERATED. FAILURE TO FOLLOW ANTIFREEZE RECOMMENDATIONS WILL CAUSE HEATER CORE TO CORRODE PREMATURELY AND POSSIBLY BURST IN AC MODE AND/OR FREEZING WEATHER, VOIDING YOUR WARRANTY.
- ☐ DOUBLE CHECK ALL FITTINGS, BRACKETS AND BELTS FOR TIGHTNESS.
- ☐ VINTAGE AIR RECOMMENDS THAT ALL AC SYSTEMS BE SERVICED BY A CERTIFIED AUTOMOTIVE AIR CONDITIONING TECHNICIAN.
- ☐ EVACUATE THE SYSTEM FOR A MINIMUM OF 45 MINUTES PRIOR TO CHARGING AND LEAK CHECK PRIOR TO SERVICING.
- ☐ CHARGE THE SYSTEM TO THE CAPACITIES STATED ON THE INFORMATION PAGE (PAGE 4) OF THIS INSTRUCTION MANUAL.

EVAPORATOR HARD LINE INSTALLATION

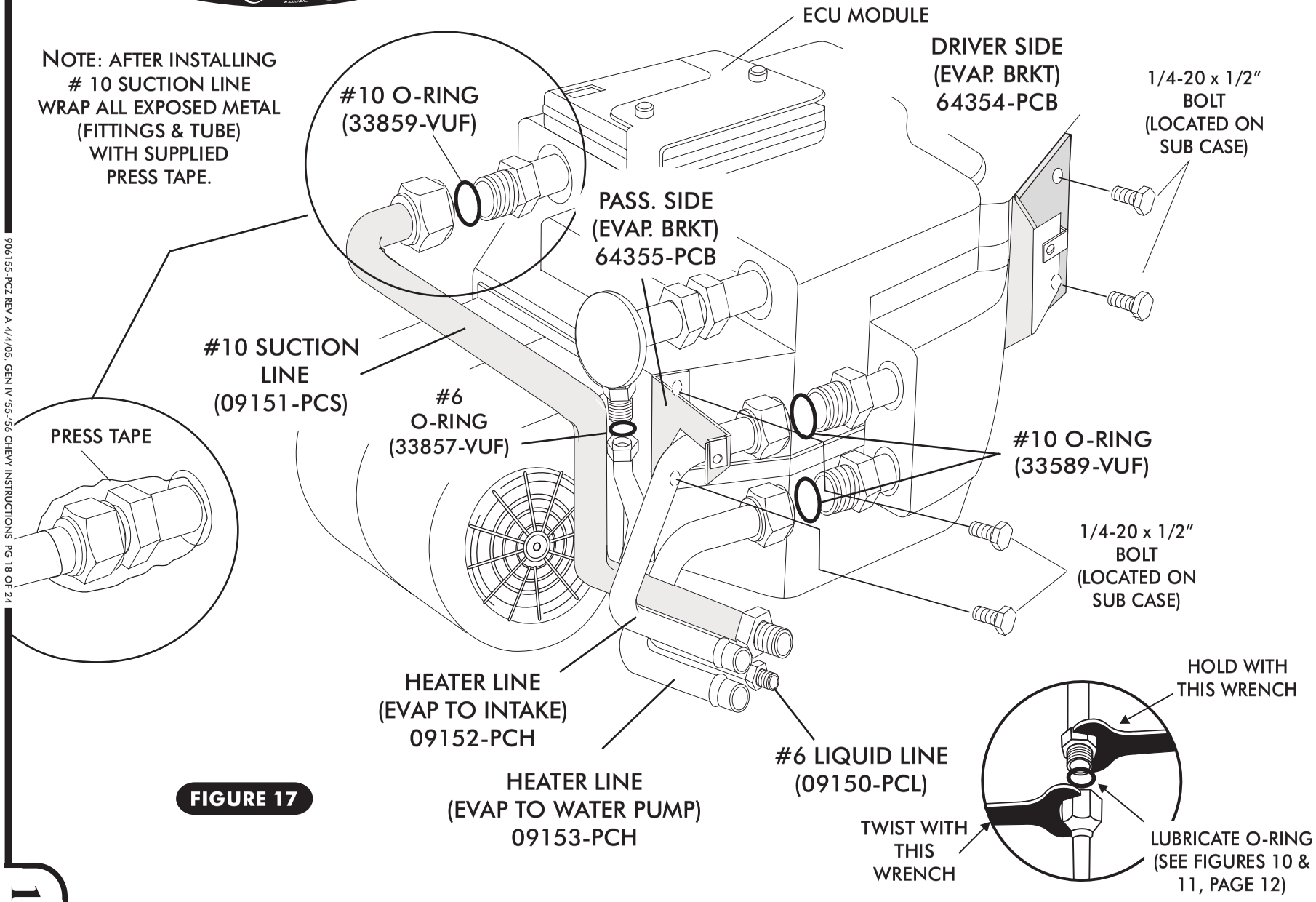

FIGURE 17

GEN IV 1955-56 CHEVY

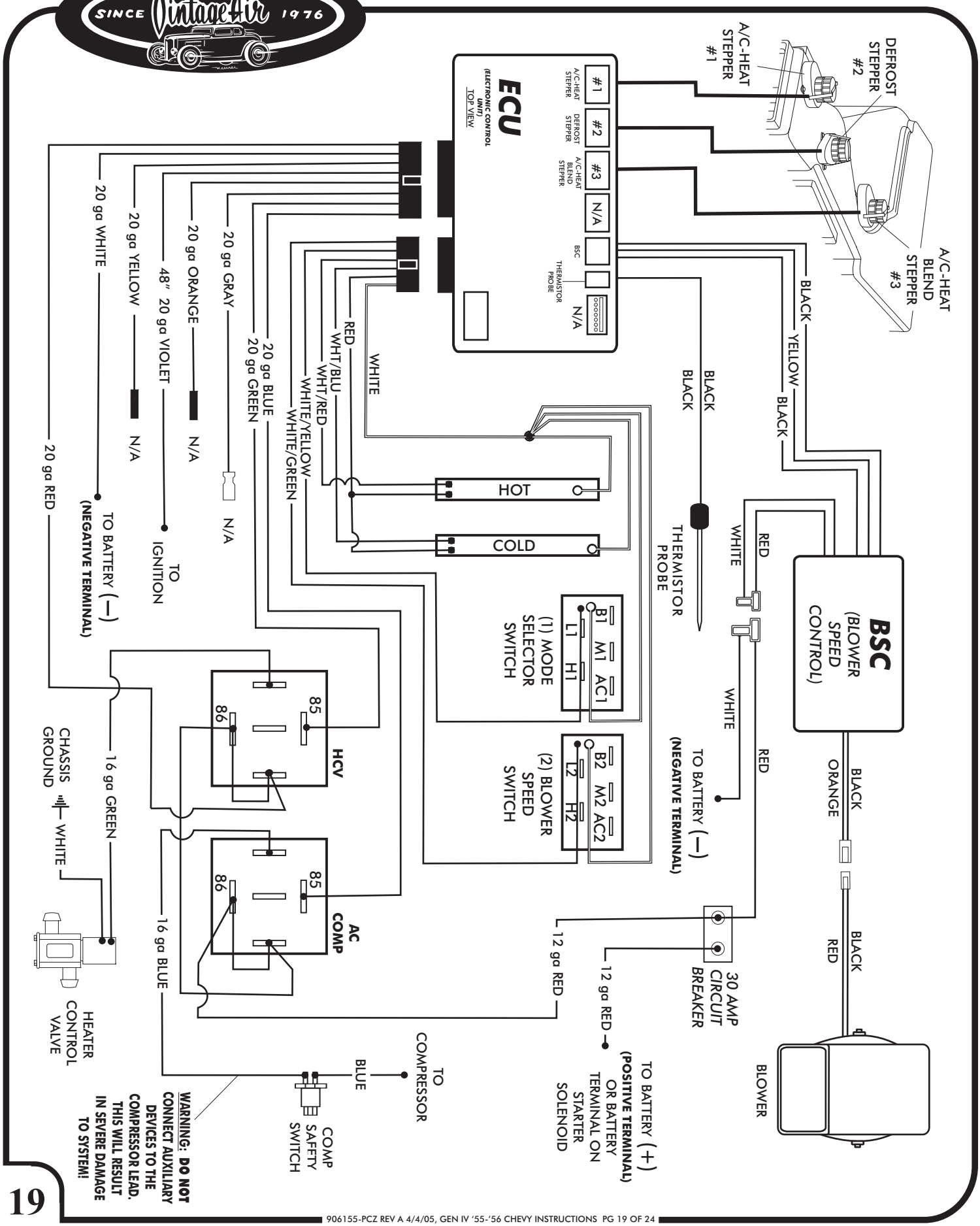

OPERATION OF CONTROLS

FOR MAXIMUM COOLING AND HEATING, THE AIR LEVER MUST BE IN "INSIDE MODE" POSITION

NOTE: WHEN BATTERY POWER IS FIRST CONNECTED TO THE ECU, THE COMPUTER GOES THROUGH AN INITIALIZATION SEQUENCE. THIS INITIALIZATION MAY TAKE UP TO 30 SECONDS. DURING INITIALIZATION THE BLOWER WILL NOT OPERATE, BUT THE DOORS INSIDE THE UNIT WILL BE OPERATING. A LOW BATTERY OR DISCONNECTING THE BATTERY MAY ALSO TRIGGER A RE-INITIALIZATION. DURING START UP, A LOW BATTERY MAY DROP BELOW 7 VOLTS, TRIGGERING RE-INITIALIZATION.

SYSTEM OFF

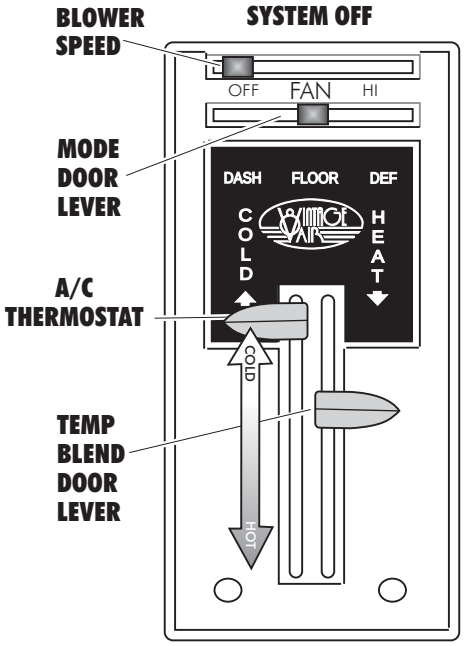

A/C THERMOSTAT
IN A/C AND DE-FOG MODE THIS LEVER SHOULD BE UP. FOR HEAT THIS LEVER SHOULD BE DOWN

MODE LEVER
INFINITELY VARIABLE FROM DASH TO FLOOR TO DEFROST

A/C MODE

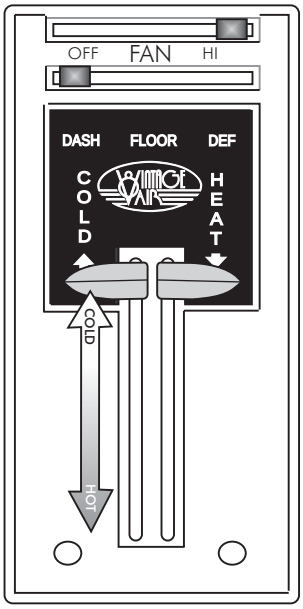

HEAT MODE

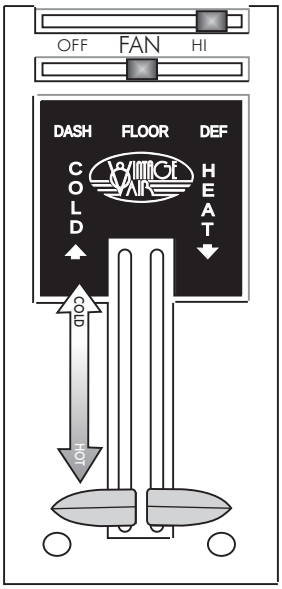

BLOWER SPEED
THIS LEVER CONTROLS THE BLOWER SPEED, WHICH IS INFINITELY VARIABLE FROM OFF TO HI

TEMP BLEND LEVER
1. THIS LEVER SHOULD BE FULLY UP WHEN IN AIR CONDITIONING POSITION.
2. IN ANY MODE THE TEMPERATURE CAN BE VARIED BY PUSHING THE TEMPERATURE LEVER DOWN. ALL THE WAY DOWN IS FULL HOT.

DEFROST MODE

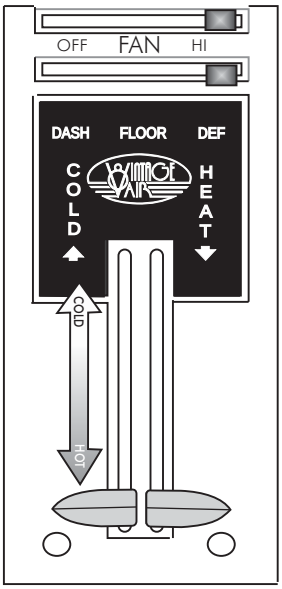

TROUBLE SHOOTING INFORMATION

SYMPTOM	SOLUTION
BLOWER STAYS ON HIGH, NO MODE FUNCTIONS	BE SURE CONTROL HEAD CONNECTOR IS PROPERLY INSTALLED
PARTIAL FUNCTION OF CONTROL HEAD. (SOME FUNCTIONS WORK)	CHECK FOR DAMAGE TO CONTROL HARNESS
COMPRESSOR DOES NOT TURN ON. (ALL OTHER FUNCTIONS WORK)	CHECK FOR PROPER CHARGE BE SURE AC LEVER (SECOND FROM LEFT) IS UP.
NO FUNCTION AT ALL	CHECK MAIN POWER LEAD AFTER CIRCUIT BREAKER CHECK FOR POWER WITH IGNITION ON AT PURPLE WIRE CHECK ALL GROUNDS

THERMOSTAT ADJUSTMENT

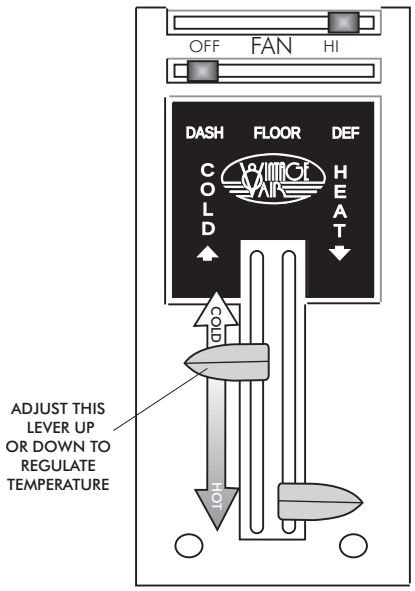

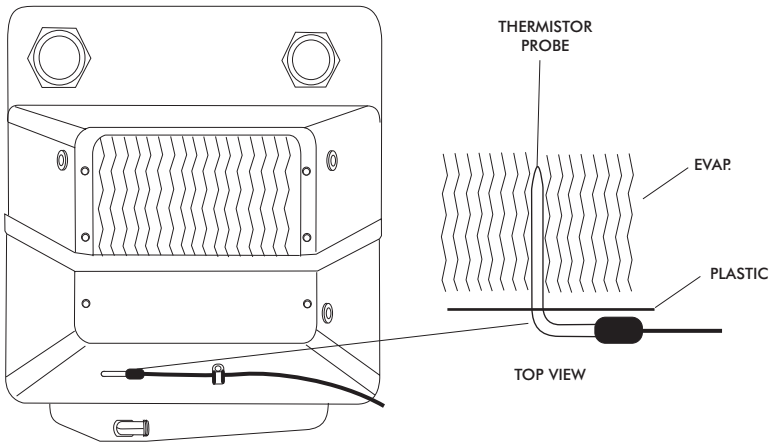

NOTE: GEN IV UNITS DO NOT HAVE A REMOTE THERMOSTAT. THE THERMISTOR PROBE INSTALLED IN THE EVAPORATOR SERVES AS THE THERMOSTAT WHICH IS CONTROLLED BY THE COLD/OFF LEVER ON THE CONTROL PANEL

AIR CONDITIONING ADJUSTMENTS:

- THE AIR CONDITIONER THERMOSTAT LEVER*(COLD LEVER)* CONTROLS COIL TEMPERATURE.
- ADJUSTING THE LEVER UP MAKES THE SYSTEM OPERATE COLDER. IF THE THERMOSTAT LEVER IS SET TOO COLD THE EVAPORATOR MAY "ICE UP" UNDER HIGH HUMIDITY CONDITIONS- THE EVAPORATOR COIL IS RESTRICTED WITH ICE AND COLD AIR FLOW WILL BE REDUCED.
- ADJUSTING THE LEVER DOWN MAKES THE SYSTEM OPERATE WARMER. THE COMPRESSOR CLUTCH WILL CYCLE MORE FREQUENTLY AND THE A/C SYSTEM WILL NOT GET AS COOL AS IT COULD.
- OPTIMUM PERFORMANCE WILL BE ATTAINED WITH THE THERMOSTAT ADJUSTED AS COLD AS POSSIBLE WITHOUT "ICING UP" THE COIL AND THEN USING THE TEMP/BLEND LEVER *(OFF/HEAT)* TO ADJUST VENT TEMPERATURE.

ADJUSTING A/C THERMOSTAT

1.) SYMPTOM: THE A/C WORKS WELL AT FIRST THEN QUITS COOLING. THE AIR FLOW FROM THE VENTS IS LOW AND THE COMPRESSOR CYCLES INFREQUENTLY.
SOLUTION: THE THERMOSTAT LEVER IS SET TOO COLD , THE EVAPORATOR IS "ICING UP" AND RESTRICTING AIR FLOW. ALLOW THE ICE TO MELT BY MOVING THE THERMOSTAT LEVER DOWNWARD (WARMER) IN INCREMENTS OF 10% UNTIL SYMPTOMS DIMINISH.

2.) SYMPTOM: A/C NEVER GETS COLD AND THE COMPRESSOR CLUTCH CYCLES FREQUENTLY.
SOLUTION: THE THERMOSTAT LEVER IS SET TOO WARM. ADJUST THE THERMOSTAT LEVER UPWARD (COLDER) IN INCREMENTS OF 10% UNTIL THE COMPRESSOR CLUTCH CYCLES INFREQUENTLY. AVOID SETTING THE THERMOSTAT LEVER TOO COLD.

(TOP)

CORE SUPPORT TEMPLATE

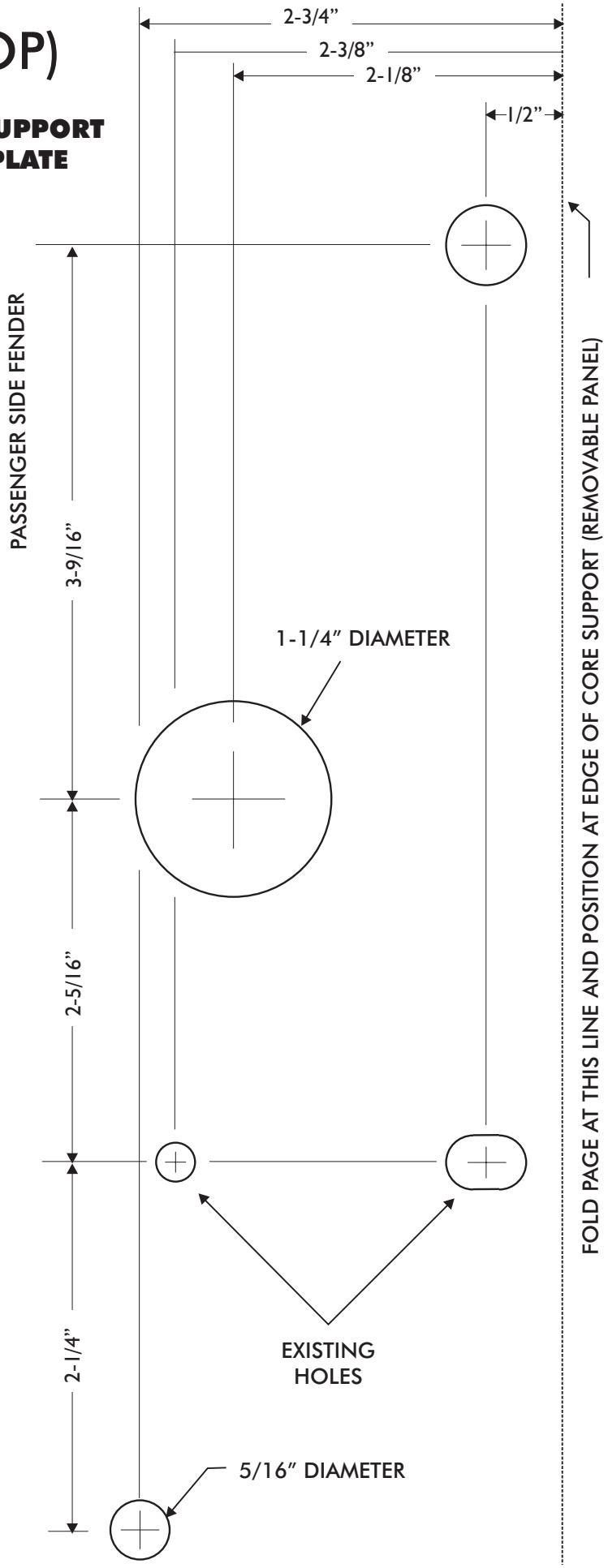

EVAPORATOR KIT PACKING LIST

EVAPORATOR KIT
56155-PCZ

No.	QTY.	PART No.	DESCRIPTION	
1.	1	760155-VCE	1955-56 CHEV. EVAP. SUB CASE	_____
2.	1	78255-PCN	1955-56 CHEV. CAR WO AC ACC. KIT	_____

CHECKED BY: _____
PACKED BY: _____
DATE: _____

①

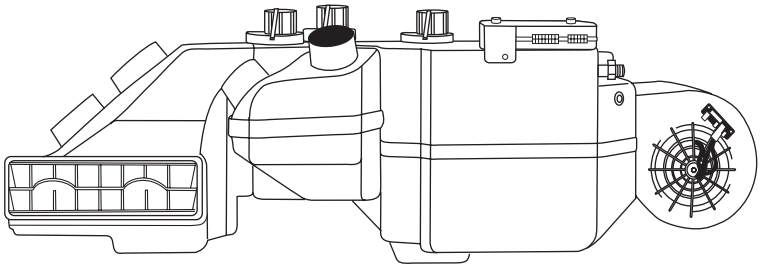

1955-57 CHEVY EVAP.
SUB CASE 760155-VCE

②

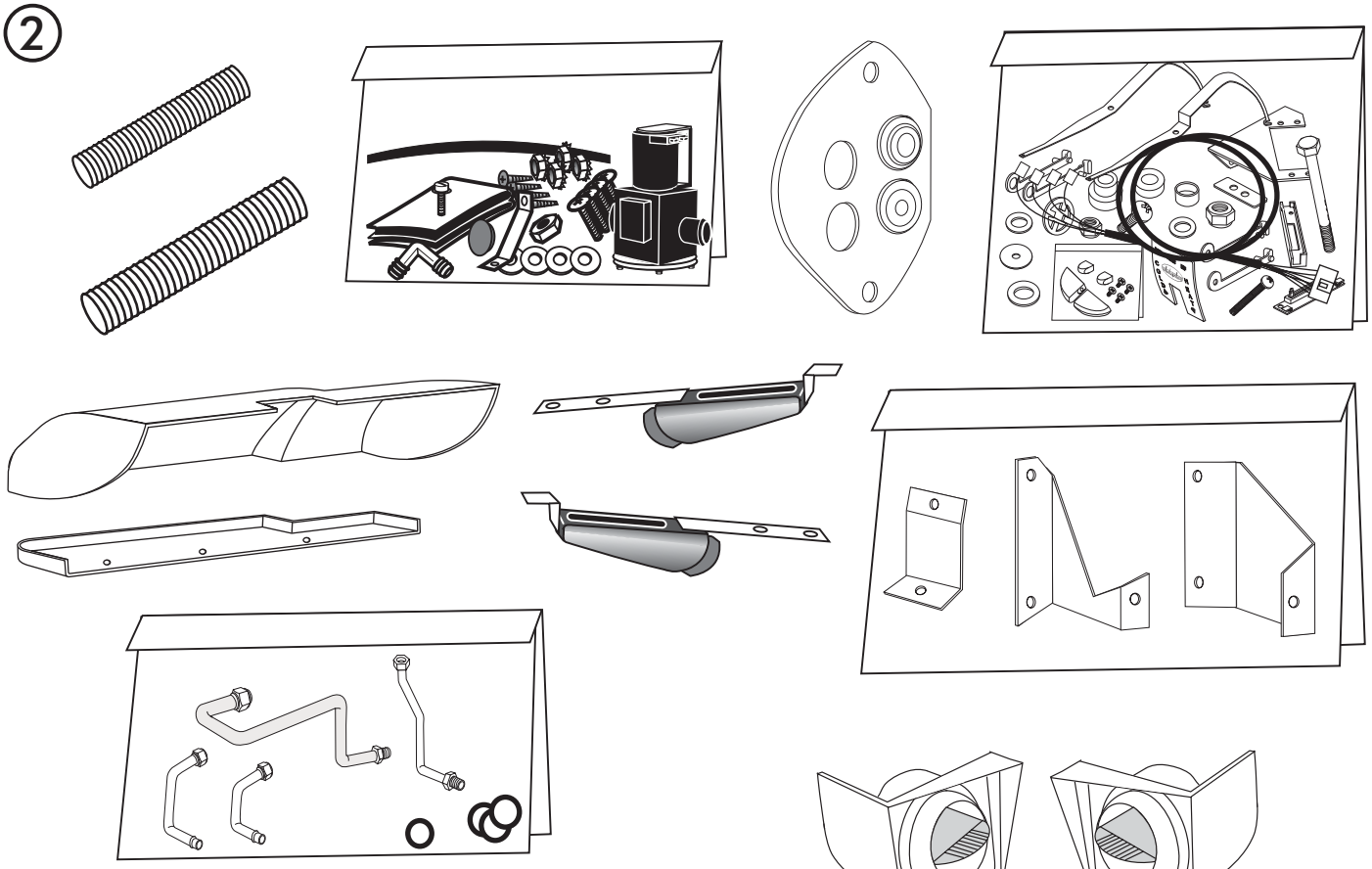

ACCESSORY KIT
78255-PCN